CAUTION - READ MANUAL & ALL NOTES BEFORE INSTALLING OR OPERATING CONTROL. SEE NOTE 1.
NO CIRCUIT CALIBRATION OR ADJUSTMENT EVER REQUIRED.

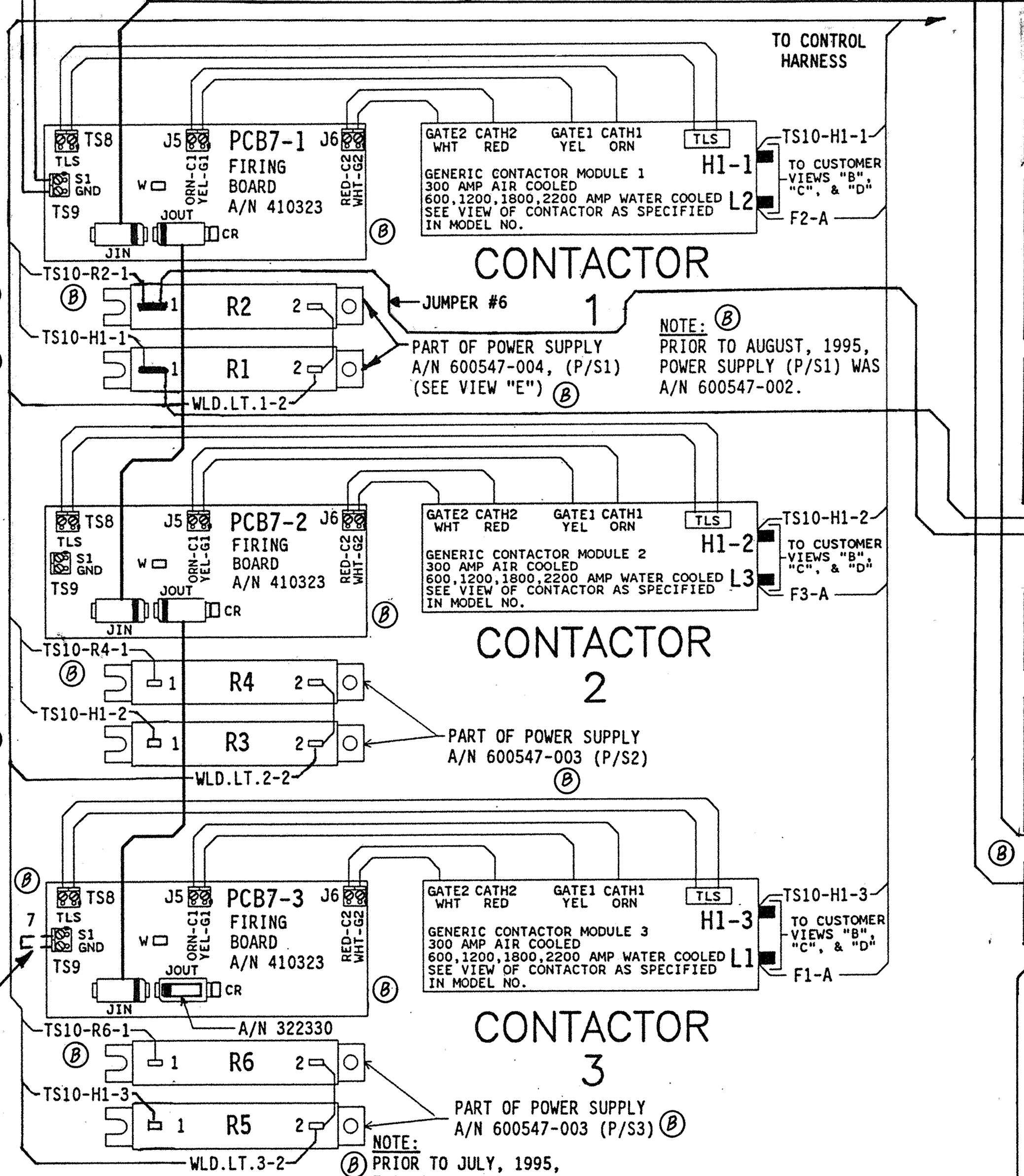

NOTE: PRIOR TO JULY, 1995, EN1003 CONTROLS USED TWELVE (12) SURGE RESISTORS. SURGE RESISTORS WERE R1 THRU R12 P/N 222516, 250 OHMS, 100W EACH.SIX (6) SURGE RESISTORS R7 THRU R12 WERE MOUNTED ON REAR PANEL. POWER SUPPLY'S (P/S1,2,3) WERE A/N 600547-002.

CUSTOMER CONNECTION
JUMPER #7 USED FOR OUTSIDE DELTA & "Y" FIRING ONLY! JUMPER #7 IS NOT INSTALLED FOR INSIDE DELTA FIRING. (SEE NOTE 2).

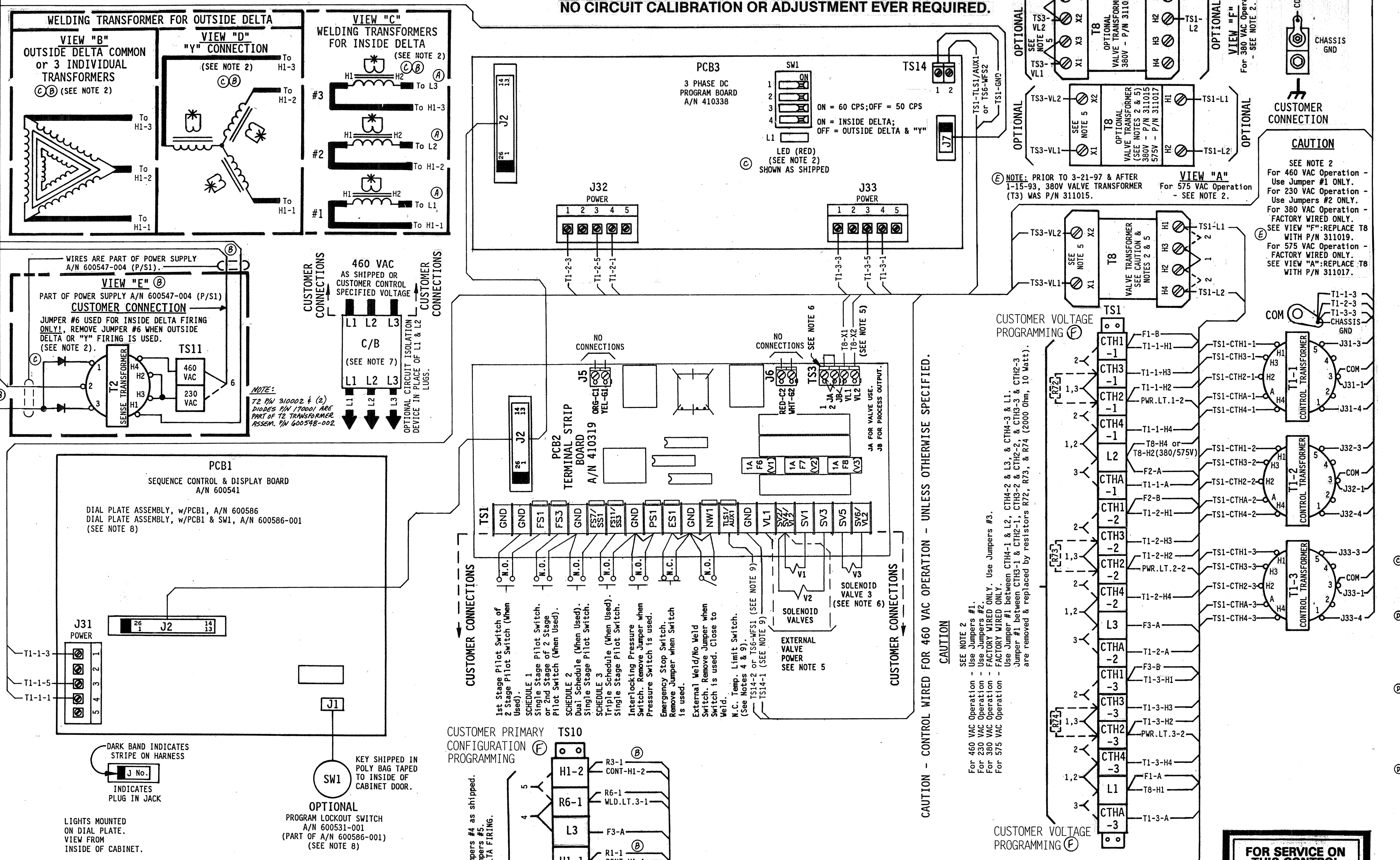

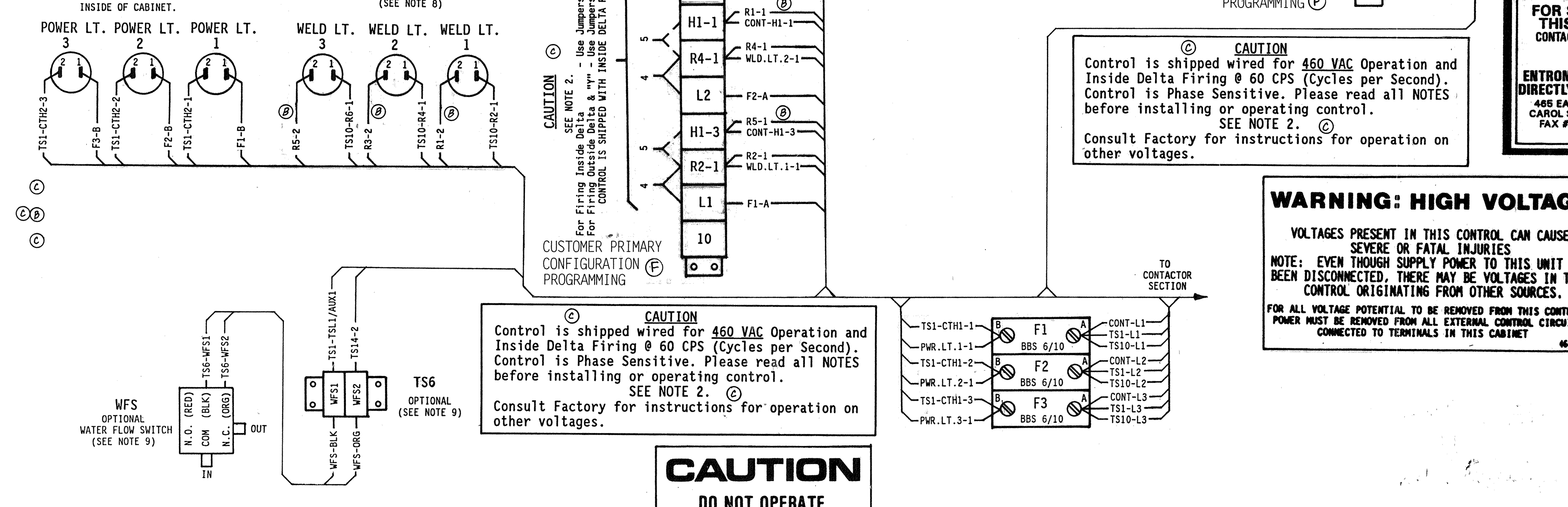

Ⓒ **CAUTION**

Control is shipped wired for 460 VAC Operation and Inside Delta Firing @ 60 CPS (Cycles per Second). Control is Phase Sensitive. Please read all NOTES before installing or operating control. SEE NOTE 2. Ⓒ Consult Factory for instructions for operation on other voltages.

Ⓒ **CAUTION**

Control is shipped wired for 460 VAC Operation and Inside Delta Firing @ 60 CPS (Cycles per Second). Control is Phase Sensitive. Please read all NOTES before installing or operating control. SEE NOTE 2. Ⓒ Consult Factory for instructions for operation on other voltages.

FOR SERVICE ON THIS CONTROL
CONTACT YOUR MACHINE DEALER
OR
ENTRON CONTROLS INC.
DIRECTLY : (630) 682-9600
465 EAST RANDY ROAD
CAROL STREAM, IL 60188
FAX # (708) 682-3374
460103

WARNING: HIGH VOLTAGE

VOLTAGES PRESENT IN THIS CONTROL CAN CAUSE SEVERE OR FATAL INJURIES
NOTE: EVEN THOUGH SUPPLY POWER TO THIS UNIT HAS BEEN DISCONNECTED, THERE MAY BE VOLTAGES IN THIS CONTROL ORIGINATING FROM OTHER SOURCES.
FOR ALL VOLTAGE POTENTIAL TO BE REMOVED FROM THIS CONTROL, POWER MUST BE REMOVED FROM ALL EXTERNAL CONTROL CIRCUITS CONNECTED TO TERMINALS IN THIS CABINET
460094

CAUTION

DO NOT OPERATE WITHOUT WATER ON

POWER ON WITHOUT WATER FLOW MAY CAUSE DAMAGE TO CONTROL. TURN POWER OFF WHEN CONTROL IS NOT IN USE.
480093

NOTES:

1. It is recommended that control wiring (i.e.: initiation, pressure switch, etc.) be physically separated from the high voltage wiring (115 volts or higher).
2. Control can be configured for Contactors Inside the Delta or Outside the Delta and "Y" Firing.

INSIDE DELTA FIRING: Use Jumpers #4 on TS10, as shipped.
On PCB3 (A/N 410338), set SW1 position #4 to "ON" position, as shipped.
On PCB3 (A/N 410338), set SW1 position #3 to "ON" position for 60 CPS (Cycles per Second), as shipped.
For 50 CPS (Cycles per Second), set SW1 position #3 to "OFF" position.
Do NOT install Jumper #7 on PCB7-3 Firing Board Terminal Strip TS9.
Jumper #7 is NOT shipped when control is wired for Inside Delta Firing.
For 460 VAC Operation - Use Jumper #1 on T8 & TS1. As shipped unless otherwise specified. Connect Jumper #6 to TS11-460 VAC (from R2-1), as shipped.
For 230 VAC Operation - Use Jumper #2 on T8 & TS1. Connect Jumper #6 to TS11-230 VAC (from R2-1).
For 380 VAC Operation - FACTORY WIRED ONLY. SEE VIEW "F". Use Jumpers #3 on TS1. Replace T8 with P/N 311019. Wire per view "F". Connect Jumper #6 to TS11-460 VAC (from R2-1).
For 575 VAC Operation - FACTORY WIRED ONLY. SEE VIEW "A". Replace T8 with P/N 311017. Wire per view "A". Jumper #1 is used between CTH4-1 & L2, CTH4-2 & L3, & CTH4-3 & L1 on TS1. Jumper #1 between CTH3-1 & CTH2-1, CTH3-2 & CTH2-2, & CTH3-3 & CTH2-3 are removed & replaced by resistors R72, R73, & R74 (2000 Ohm, 10 Watt) on TS1. Connect Jumper #6 to TS11-460 VAC (from R2-1).
Control is Phase Sensitive - Control must be Phased properly for correct operation. Swap any two (2) power leads (L1, L2, & L3) until red LED (L1) on PCB3 (A/N 410338) goes on.

OUTSIDE DELTA & "Y" FIRING: Use Jumpers #5 on TS10.
On PCB3 (A/N 410338), set SW1 position #4 to "OFF" position.
On PCB3 (A/N 410338), set SW1 position #3 to "ON" position for 60 CPS (Cycles per Second).
For 50 CPS (Cycles per Second), set SW1 position #3 to "OFF" position.
On Power Supply P/S1 A/N 600547-004, remove Jumper #6 on TS11. Tie Jumper #6 back into harness.
Add Jumper #7 to PCB7-3 Firing Board on Terminal Strip TS9.
Jumper #7 P/N 324021 is shipped installed when control is wired for Outside Delta or "Y" Firing.
For 460 VAC Operation - Use Jumper #1 on T8 & TS1.
For 230 VAC Operation - Use Jumper #2 on T8 & TS1.
For 380 VAC Operation - FACTORY WIRED ONLY. SEE VIEW "F". Use Jumpers #3 on TS1. Replace T8 with P/N 311019. Wire per view "F".
For 575 VAC Operation - FACTORY WIRED ONLY. SEE VIEW "A". Replace T8 with P/N 311017. Wire per view "A". Jumper #1 is used between CTH4-1 & L2, CTH4-2 & L3, & CTH4-3 & L1 on TS1. Jumper #1 between CTH3-1 & CTH2-1, CTH3-2 & CTH2-2, & CTH3-3 & CTH2-3 are removed & replaced by resistors R72, R73, & R74 (2000 Ohm, 10 Watt) on TS1.
Control is Phase Sensitive - Control must be Phased properly for correct operation. Swap any two (2) power leads (L1, L2, & L3) until red LED (L1) on PCB3 (A/N 410338) goes on.

3. For Single Stage Pilot Operation - Connect pilot switch to TS1-FS3 & TS1-GND. No jumpers required across TS1-FS1 & TS1-GND.

   For Two Stage Pilot Operation - Connect 1st stage pilot switch to TS1-FS1 & TS1-GND. Connect 2nd stage pilot switch to TS1-FS3 & TS1-GND.

   For DUAL COUNT/DUAL CURRENT (Dual Weld/Dual Heat) or TRIPLE COUNT/TRIPLE CURRENT (Triple Weld/Triple Heat) or External Schedule Selection, SEE MANUAL.
4. ENTRON supplies Temperature Limit Switch (TLS) P/N 300020. TLS SCR will open at temperatures greater than or equal to 150 F.
5. When external valve power is supplied to the control. Remove and insulate leads TS3-VL1 & TS3-VL2 on the Terminal Strip Board (PCB2), (from T8-X1 & T8-X2). Connect external AC power supply (24-240 VAC) to TS1-VL1 & TS1-SV2/SV4/VL2.
6. VALVE 3 OUTPUT USAGE:
   TS1-SV5 & TS1-SV6 (Valve 3) can be used for either a Valve output or a Process output.
   When TS1-SV5 & TS1-SV6 is used as a Valve output use Jumper "A" on TS3.
   When TS1-SV5 & TS1-SV6 is used as a Process output use Jumper "B" on TS3.
   CAUTION: Do not overtighten TS3.

   WARNING: Use of Jumper "B" bypasses control relay contacts to allow a process output without an initiation. SEE MANUAL.
7. When Optional Circuit Isolation Device is required, list P/N and size of Circuit Isolation Device, and appropriate cabinet A/N.
8. When Optional Program Lockout is specified by customer. Dial Plate A/N 600586-001 replaces A/N 600586. Add Switch P/N 600531-001 & remove Hole Plug P/N 565003.
9. When Optional Water Flow Switch (WFS) is required, add Terminal Strip TS6 (P/N 335017) and wire as shown. Jumper not required between TS1-TLS1/AUX1 & TS1-GND. WFS will open with flows less than .75 GPM.

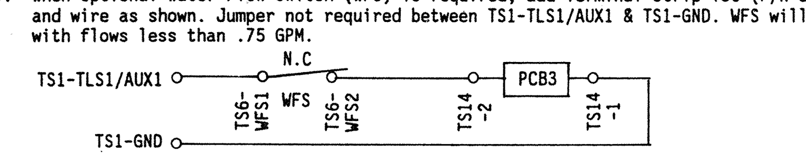

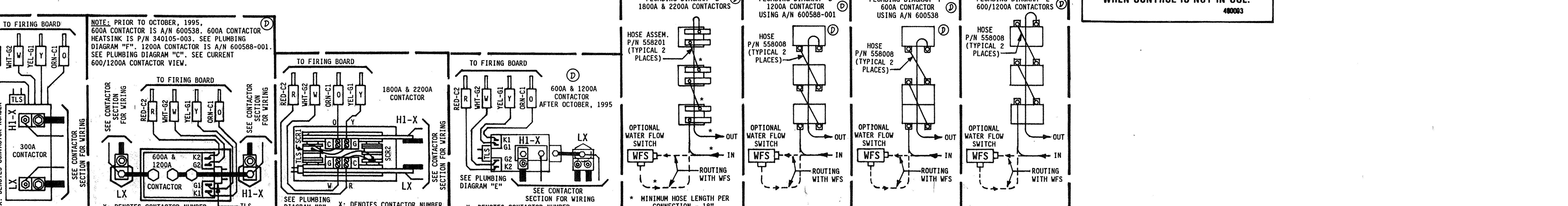

PARTS LIST - CONTROL SECTION — 421291 F

Rev	SIDE MT. DIAL PL. QTY.	DOOR MT. DIAL PL. QTY.	DESIG.	PART NO.	DESCRIPTION
	1	1		600586	Assem., Dial Plate, w/Sw. Assem., EN1003, Consisting of:
	@	@		600586-001	Assem., Dial Plate, w/Sw. Assem. & Keylock, EN1003, Consisting of:
	1	1	PCB1	600541	Assem., Switch, Sequence Control & Display Board
	@	@	SW1	600531-001	Assem., Switch, Keylock, Momentary, SPST
	1	1	PCB3	410338	Assem., PCB, Program Board, EN1003
	1	1		540240	Illustrated Panel, Dial Plate, EN1003
	1	1		515104	Panel, Display Window, Red Filter, EN1003
	1	1		565003	Hole Plug, 3/4" Diam., Black
Ⓑ Ⓑ				322374 322375	
	1		J3	322377	Assem., Harness, Power, Side Mounted
		1	J3	322376	Assem., Harness, Power, Door Mounted
Ⓑ	1		J2-J2-J2	322337-003	Assem., Harness, Display/Term Strip/Program Bd's, Side Mt.
Ⓑ		1	J2-J2-J2	322337-002	Assem., Harness, Display/Term Strip/Program Bd's, Door Mt.
	1	1	J7-IN	322373	Assem., Harness, Program Bd. to Firing Bd.
	2	2	JIN-JOUT	322348	ASSEM., HARNESS, FIRING BD., I/O
	3	3	PWR.LT.1,2,3	305001	Lamp, Neon, Red, 230V
	3	3	WLD.LT.1,2,3	305002	Lamp, Neon, Clear, 230V
	1	1		540239	Illustrated Light Plate, 6 Position

PARTS LIST - CONTACTOR SECTION

Rev	EN1003-2200H	EN1003-1800H	EN1003-1200L	EN1003-600L	EN1003-300L	DESIG.	PART NO.	DESCRIPTION
	1	1	1	1	1	TS1	335013	Terminal Strip, 18 Pin, (Part of J3 Harness)
	1	1	1	1	1	TS10	335034	Terminal Strip, 10 Pin, (Part of J3 Harness)
	+	+	+	+		TS6	335017	Terminal Strip, 2 Pin, (For TLS/WFS)
Ⓑ Ⓓ	1	1	1	1	1	TS11	335017	Terminal Strip, 2 Pin, (Part of 600547-004)
							600538	
	3	3	3	3	3	T1-1 thru -3	310001	Transformer, Control, (Part of J3 Harness)
Ⓑ	1	1	1	1	1	T2	600548-002	Assem., Transformer, Sense, 150VA, (Part of 600547-004)
	1	1	1	1	1	T8	311002	Transformer, Valve, 150VA
	*	*	*	*	*	T8	311017	Transformer, Valve, 150VA, 575V
Ⓔ	#	#	#	#	#	T8	311019	Transformer, Valve, 150VA, 380/408/415V
Ⓑ	6	6	6	6	6	R1-6	225016	Resistor, Power, Surge, 500 Ohm, 100W, (Part of P/S1,2,3)
	*	*	*	*	*	R72,73,74	600048	Assem., Resistor, Power, 2000 Ohm, 10W, (For 575V)
Ⓑ							222516	
	1	1	1	1	1	F1	308010	Fuseholder, 1 Pole, Mini, 600V, HPC-L(BBS)
	1	1	1	1	1	F2,3	308006	Fuseholder, 2 Pole, Mini, 600V, For Dual BAF 6
	3	3	3	3	3	F1,2,3	307018	Fuse, Control, 6/10A, BBS 6/10
	3	3	3	3	3	F6,7,8(PCB2)	307022	Fuse, 1 Amp, Slow Blow, 2AG, (Part of 410319)
Ⓑ							325024	
	2	2	2	2	2	(T8)	325149	Assem., Wire, Valve Transformer, 22GA., Black
	1	1	1	1	1	(JOUT)	322330	Assem., Termination Plug, Firing Board
Ⓒ Ⓑ	1	1	1	1	1	JUMPER 7	324021	Wire, Single, Conductor, 18 Ga., Black, 2" Long, (SEE NOTE 2)
Ⓑ							600547-002	
Ⓑ	2	2	2	2	2	P/S2,3	600547-003	Assem., Power Supply, Contactor, EN1003
Ⓑ Ⓑ	1	1	1	1	1	P/S1	600547-004	Assem., Power Supply, Contactor, EN1003, w/Sense Transformer
Ⓑ	3	3	3	3	3	PCB7-1 THRU -3	410323	Assem., PCB, Firing Board, EN1003, (Mounted on P/S1,2,3)
	1	1	1	1	1	PCB2	410319	Assem., PCB, Terminal Strip Board, EN1000/EN1003
Ⓓ Ⓑ							340105-003	
					3		600520	Assem., Contactor, Thyristor, Air, 300A, 460/575V, w/TLS
Ⓓ				3			600610	Assem., Contactor, Thyristor, Water, 600A, 460/575V
Ⓓ				3			346004	Lug, Screw, 5/16 Bolt to 2/0 Wire, 600A Thyristor Contactor, H1
Ⓓ				3			346015	Lug, Screw, 1/4 Bolt to Dual 2/0 Wire, 600A Thyristor Cont., L1
Ⓓ			3	3			341040	Insulator, Standoff, 600/1200A Thyristor Contactor, L1
Ⓓ			3	3			325174	Assem., Wire, Contactor-L1 to Lug L1, 600/1200A Thyristor Cont.
Ⓓ			3				600598	Assem., Contactor, Thyristor, Water, 1200A, 460/575V
Ⓓ Ⓑ			3				346002	Lug, Screw, 5/16 Bolt to 250 MCM Wire, 1200A Contactor, H1
Ⓓ			3				346006	Lug, Screw, 1/4 Bolt to Dual 250 MCM Wire, 1200A Cont., L1
Ⓓ		3					600549	Assem., Contactor, SCR, Water, 1800A, 460/575V
Ⓓ		3					346005	Lug, Screw, 1/4-20 HHCS to 350 MCM Wire, 1800A Cont., H1
Ⓓ		3					346010	Lug, Screw, 1/4-20 HHCS to Dual 350 MCM Wire, 1800A Cont., L1
Ⓓ	3						600535	Assem., Contactor, SCR, Water, 2200A, 460/575V
Ⓓ	3						346003	Lug, Screw, 1/4-20 HHCS to 500 MCM Wire, 2200A Cont., H1
Ⓓ	3						346016	Lug, Screw, 1/4-20 HHCS to Dual 500 MCM Wire, 2200A Cont., L1
	1	1	1	1	1		346004	Lug, Screw, Chassis GND, 2/0 Wire
Ⓓ Ⓑ							346011	
	2	2	2	2	2		510236	Plate, Mounting, Terminal Strip Bd. & Program Bd.
					3		525035	Bracket, Mounting, 300A Thyristor Contactor
Ⓑ	3	3					525136	Bracket, Mounting, 1800/2200A Contactors
Ⓑ Ⓑ	3	3	3	3	3	TLS	300020	Switch, Temperature Limit, (N.C.),(Part of 300A Cont. Assem.)
							530021	
			2	2			558008	Hose, 3/8" I.D. x 12" Lg.
	2	2					558201	Assem., Hose, 3/8" I.D. x 2-3/8" Coil
	72"	72"	42"	42"			900045	Hose, 3/8" I.D.
	8	8	8	8			566010	Hose Clamp, 3/8" Hose
	2	2	2	2			600179	Assem., Water Fitting, 3/8" Hose
	+	+	+	+		WFS	600297	Assem., Water Flow Switch, 3/8" Hose
Ⓓ							600588-001	
			1	1	1		550014	Vault Closing Door Mechanism, "LS/LF" Cabinet
	1	1					550015	Vault Closing Door Mechanism, "HS/HF" Cabinet
Ⓑ	△	△	△	△	△	C/B		Circuit Breaker, Pole, Amp, V
Ⓑ Ⓓ							600533-005	
Ⓑ			1	1	1		510257	Cabinet, Control, Style "LS/LF", w/CB
Ⓑ			1	1	1		510258	Door, Cabinet, Control, Style "LS/LF"
	1	1					510053	Cabinet, Control, Style "HS/HF", w/CB
Ⓑ							510103	
	1	1	1	1	1		700105	Manual, EN1000
	1	1	1	1	1		700124	Application Note, 3 Phase DC Control, EN1003
	1	1	1	1	1		421292	Logic Diagram, EN1003
	1	1	1	1	1		421291	Wiring Diagram, EN1003-Series, "LS/LF" & "HS/HF" Cabinet
Ⓓ							600533-003	

Ⓑ △ Optional. See Note 7.
@ Optional Keylock when specified by customer. See Note 8. Pack Key in Poly Bag 900148 & attach to Door w/Yellow Tape 900118.
* Substitution or addition of parts when 575V control is specified.
\# Substitution of part when 380V control is specified.
\+ Optional Water Flow Switch Assembly & TS6. An additional Thirty-Six inches (36") of hose, P/N 900045 and two (2) hose clamps, P/N 566010 are to be supplied. See Note 9.

See Wiring Diagram #421310 for EN1003-Series, "D/T" Cabinet.

MANUFACTURING INSTRUCTIONS:
See Drawings #440365, #515112, #515114, & #600552 for Mechanical Assembly Instructions of EN1003 "LS/LF" & "HS/HF" Cabinet.
See Drawing #496232 for Rear Panel Layout of 300A Contactor, "LS/LF" Cabinet.
See Drawing #496432 for Rear Panel Layout of 600/1200A Contactor, "LS/LF" Cabinet.
See Drawing #496633 for Rear Panel Layout of 1800/2200A Contactor, "HS/HF" Cabinet.
See Drawing #440093 for Crating Instructions of "LS/LF/HS/HF" Cabinet.
See Drawing #440437 for Circuit Breaker to Contactor L1 Cable connection.
See Drawing #421294 for Logic Diagram, Contactor & Power Supply, 460 VAC Operation.

REV.	AUTH.	DESCRIPTION	DRWN BY DATE	CHK'D BY DATE
F	ECN 2753	ON TS1, RMV'D. "CUSTOMER CONNECTIONS" REPLACED WITH "CUSTOMER VOLTAGE PROGRAMMING". ON TS10 RMV'D. "CUSTOMER CONNECTIONS" REPLACED WITH "CUSTOMER PRIMARY CONFIGURATION PROGRAMMING".	12|11|02 RHL	
E	ECN 2441	FOR 300A XTOR,600A XTOR,1200A XTOR,1800A XTOR, & 2200A XTOR COLUMNS IN P/L:T8 380V VALVE XFMR 311019 WAS 311015;IN DRWG:ADDED T8 380V VALVE XFMR VIEW "F" OF 311019,ADDED REF NOTE "PRIOR TO 3-21-97..." TO VIEW "A" FOR PREVIOUS 380V VALVE XFMR,UPDATED VALVE XFMR "CAUTION..." REF NOTE, & UPDATED NOTE 2 "INSIDE,OUTSIDE DELTA, & Y FIRING...." FOR 380V VALVE XFMR CHANGE;	DEC 5-16 97	DEC 5-16 97
D	ECN 2376	FOR 600A XTOR COLUMN IN P/L:600A XTOR (3)600610 REPLACED 600A XTOR (3)600538 & HEATSINK (3) 340105-003,RMV'D H1 INSULATOR (3)341040,ADDED L1 WIRE (3)325174,L1 LUG (3)346015 WAS (3)346011, & H1 LUG (3)346004 WAS (3)346011;FOR 1200A XTOR COLUMN IN P/L:1200A XTOR (3)600598 WAS (3)600588-001,RMV'D H1 INSULATOR (3)341040,ADDED L1 WIRE (3)325174, & L1 LUG (3)346006 WAS (3)346002;FOR 1800A XTOR COLUMN IN P/L:1800A XTOR (3)600549 WAS (3)600533-005,ADDED H1 LUG (3)346005, & ADDED L1 LUG (3)346010;FOR 2200A XTOR COLUMN IN P/L:2200A XTOR (3)600535 WAS (3) 600533-003,ADDED H1 LUG (3)346003, & ADDED L1 LUG (3)346016;IN DRWG:LABELED PLUMBING DIAG'S "B","C", & "F",ADDED PLUMBING DIAG "E", & ADDED 600/1200A XTOR (AFTER OCT,1995) VIEW;IN PREVIOUS 600/1200A XTOR VIEW:ADDED REF "PRIOR TO OCT,1995...";IN PLUMBING DIAG "C":ADDED REF "USING 600588-001";IN PLUMBING DIAG "F":ADDED REF "USING 600538";	DEC 3-7 96	DEC 3-7 96

REV.	AUTH.	DESCRIPTION	DRWN BY DATE	CHK'D BY DATE
C	ECN 2373	IN P/L:ADDED DESC "SEE NOTE 2" TO JUMPER 7 324021; IN DRWG:LABELED VIEWS "B" & "D" FOR OUTSIDE DELTA FIRING,UPDATED CAUTION REF "CTRL SHIPPED FOR 460 VAC...",UPDATED NOTE 2 "FOR VOLTAGE OPER..." TO INCLUDE INSIDE/OUTSIDE DELTA & "Y" FIRING,SW1 POSITIONS 3 & 4, & CTRL LED PHASE,RMV'D NOTE 10 "CTRL PHASED PROPERLY W/LED...",RMV'D NOTE 11 "INSIDE/OUTSIDE DELTA & Y FIRING...",RMV'D NOTE 12 "SW1 POSITIONS 3 & 4...",UPDATED P/S3 REF FOR "JUMPER 7...", & UPDATED REF'S TO "SEE NOTE 2";	DEC 2-27 96	DEC 2-27 96
B	ECN 2312	IN CTRL SECTION OF P/L:J2 HARNESS'S 322337-003 WAS 322375 & 322337-002 WAS 322374;FOR 600A XTOR COLUMN IN P/L:RMV'D PLATE (3)530021 & BRKT (3)525136;FOR 1200A XTOR COLUMN IN P/L:ADDED LUG (6)346002,RMV'D PLATE (3)530021,LUG (6)346011,BRKT (3)525136,HEATSINK (3)340105-003, & ADDED DESC "P/O 1200A XTOR" TO TLS 300020;FOR 300A,600A,1200A,1800A, & 2200A XTOR COLUMNS IN P/L:ADDED TRIANGLE REF TO C/B;IN DRWG BELOW P/L:ADDED TRIANGLE REF TO "OPTIONAL" REF NOTE;	DEC 8-9 95	DEC 8-9 95
	ECN 2311	FOR 300A,600A,1200A,1800A, & 2200A XTOR COLUMNS IN P/L:P/S1 600547-004 WAS 600547-002,P/S2,3 600547-003 WAS 600547-002,ADDED TS11 335017,T2 600548-002,JUMPER 7 324021,RMV'D SURGE RESISTOR JUMPER (6)325024,R1-6 DESC "P/O P/S1,2,3" WAS "P/O 600547-002", & PCB7-1,-2,-3 410323 DESC "MOUNTED ON P/S1,2,3" WAS "PART OF 600547-002";IN DRWG:UPDATED NOTE 11 "INSIDE/OUTSIDE DELTA & Y FIRING...",ADDED VIEW "E" OF T2 & WIRE CONNECTIONS FROM T2 TO P/S1,ADDED REF "SEE NOTE 11" TO VIEWS "B,C, & D",P/S1 REF "600547-004" WAS "600547-002",P/S2,3 REF "600547-003" WAS "600547-002",ADDED P/S1 REF "PRIOR TO AUG,1995...", & ADDED JUMPER 7 TO PCB7-3 410323;		
	ECN 2310	FOR 300A,600A,1200A,1800A, & 2200A XTOR COLUMNS IN P/L:"L" CAB 510257 & "L" CAB DOOR 510258 REPLACED "L" CAB 510103;		
	ECN 2225	FOR 300A,600A,1200A,1800A, & 2200A XTOR COLUMNS IN P/L:RMV'D SURGE RESISTORS R7-12 (6)222516 250 OHMS & SURGE RESISTORS R1-6 (6)225016 500 OHMS WAS (6) 222516 250 OHMS;IN DRWG:RMV'D (6)SURGE RESISTORS R7 THRU R12,REWIRED SURGE RESISTORS,WELD LT'S, & TS10 FOR 6 SURGE RESISTORS INSTEAD OF 12 SURGE RESISTORS, ADDED SURGE RESISTOR REF "PRIOR TO JULY, 1995...", & RMV'D ARROW THAT REF'D PCB7 AS PART OF P/S ASSEM'S (3 PLACES);		

REV	AUTH	DESCRIPTION	DRWN BY DATE	CHK BY DATE
A	ECN 2231	IN VIEW "C" INSIDE DELTA FIRING:WELDING XFMR #1 H2 WAS CONNECTED TO L2 NOW L1,WELDING XFMR #2 H2 WAS CONNECTED L3 NOW L2, & WELDING XFMR #3 H2 WAS CONNECTED TO L1 NOW L3;	DEC 8-22 94	DEC 8-22 94
—	—	ORIGINAL RELEASE		

ENTRON CONTROLS INC

SCALE	DATE	DRAWN BY	CHK'D BY	APPROVED BY
NONE	10-17-94	DEC	DEC 10-17-94	

TOLERANCE UNLESS SPECIFIED: ANGLES: ± ½°; DECIMALS: ± .010; .FRACTIONS: ± 1/64
REVISED: REV LTR F; DATE 12/11/02 RHL; APPROVED BY

WIRING DIAGRAM, EN1003-SERIES, "LS", "LF", "HS", or "HF" CABINET

NEXT ASSM/USED ON | DRAWING NUMBER 421291- | REV F

DRAWING NUMBER 421291- REV F

60194 22×34 ENTRON 470046