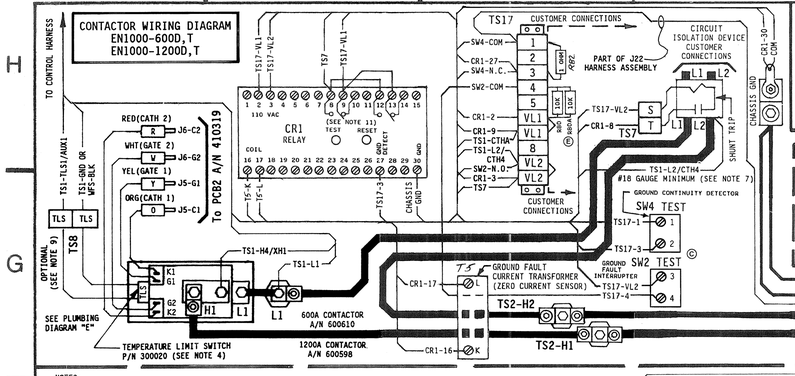

CAUTION - READ MANUAL & ALL NOTES BEFORE INSTALLING OR OPERATING CONTROL. SEE NOTE 1.

DANGER WELD TRANSFORMER H1 & H2 AND GROUND FAULT INTERRUPTER PUSH TO TEST WIRE ARE THE ONLY 2 CONDUCTORS THAT SHOULD PASS THROUGH THE ZERO CURRENT SENSOR. SHOCK HAZARD. CONTACT WITH ANY LIVE WIRE OR LIVE WIRE MAY CAUSE SHOCK OR BURN. 4007238

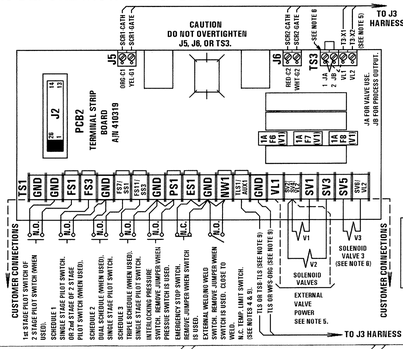

CAUTION
Control Shipped Wired for 460 VAC
Unless otherwise specified - See Note 2.

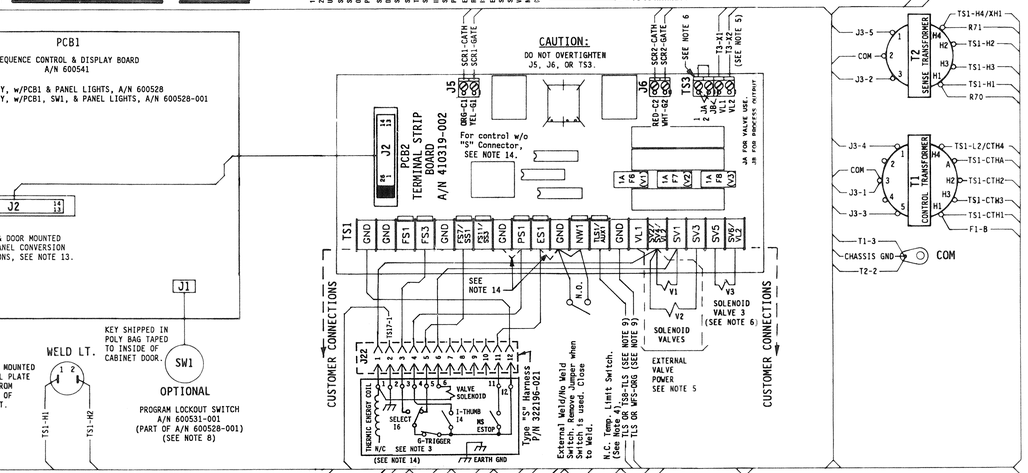

NOTES:

1. It is recommended that control wiring (i.e.: initiation, pressure switch, etc.) be physically separated from the high voltage wiring (115 volts or higher).

2. For 460 VAC Operation - Use Jumper #1 on T3 & TS1. As shipped unless otherwise specified.
   For 230 VAC Operation - Use Jumper #2 on T3 & TS1.
   For 380 VAC Operation - CONSULT FACTORY.
   For 575 VAC Operation - CONSULT FACTORY.

3. Type "S" (J22): DO NOT CONNECT GUN GND TO CONTROL GND (TS1-GND)!
   Control Factory wired for GND Loss Protection. Loss of Gun Earth GND will prevent Control initiation. Gun internal connections must be modified for correct operation of Ground Loss Protection Circuitry. The wire that connects the Thermic Energy Coil to P22-2 should be disconnected from Terminal Strip in Gun and insulated. This same Terminal Strip connection should then be grounded to the case of the gun at some point on the gun that no other wires share. For customer connections to Type "S" connector, see J22 Harness wiring configuration.

4. EN1000-SERIES, "D/T" CABINET:
   ENTRON supplies Temperature Limit Switch (TLS) P/N 300020 and provides connections to TS1-TLS1/AUX1 & TS1-GND. Jumper not required between TS1-TLS1/AUX1 & TS1-GND.
   NOTE: TLS Thyristor will open at temperatures greater than or equal to 150° F.

5. When external valve power is supplied to the control. Remove and insulate leads TS3-VL1 & TS3-VL2 on the Terminal Strip Board (PCB2). (from T3-X1 & T3-X2). Connect external AC power supply (24-240 VAC) to TS1-VL1 & TS1-SV2/SV4/VL2.
   CAUTION: Do not overtighten TS3.

6. Valve Usage:
   When using this control with air over oil Portable Transformer Guns with Extend and Intensify and/or Blocking valves the following valve assignments and jumper placement must be followed:
   TS1-SV1 & TS1-SV2 connects to Extend solenoid valve.
   TS1-SV3 & TS1-SV4 connects to Intensify solenoid valve.
   TS1-SV5 & TS1-SV6 connects to Blocking solenoid valve (when used).

   NOTE: TS1-SV5 & TS1-TS6 can be used for a valve output or a Process Output (Blocking Valve). When using TS1-SV5 & TS1-SV6 as a valve output use jumper "A" on TS3. When using TS1-SV5 & TS1-SV6 as a Process Output (Blocking Valve) use jumper "B" on TS3.

   CAUTION: Do not overtighten TS3

   WARNING: Use of Jumper "B" bypasses control relay contacts to allow a Process Output without an initiation. SEE MANUAL.

7. TS1-L2/CTH4 to Circuit Breaker L2 is Factory Installed.

8. When Optional Program Lockout is specified by customer. Dial Plate A/N 600528-001 replaces A/N 600528. Add Switch P/N 600531-001 & remove Hole Plug P/N 565003.

9. When TLS and WFS are used together, add WFS P/N 600297 & Terminal Strip TS8 P/N 335017. Wire as shown below. Jumper not required between TS1-TLS1/AUX1 & TS1-GND. WFS will open with flows less than .75 GPM.

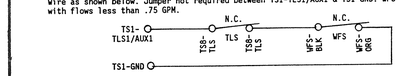

10. BEAT DURING SQUEEZE - If this is required, set Extended Function bE to 01 to engage BEAT DURING SQUEEZE function. Control will then function in BEAT DURING SQUEEZE mode. See manual for more information.

    NON BEAT DURING SQUEEZE -If this is required, set Extended Function bE to 00 to disengage preprogrammed BEAT DURING SQUEEZE function. Control will then function in NON BEAT DURING SQUEEZE mode. See manual for more information.

11. GROUND FAULT INTERRUPTER:
    Ⓐ This control is equipped with a ground fault and Ground Continuity operator protection system. For proper operation and operator protection, the following MUST be considered:

    H1 & H2 Weld Transformer primary connections and push to TEST (SW2) lead are the ONLY 3 conductors that should pass through the Ground Fault Current Transformer (T5). The H1 & H2 wires should also be in close proximity to each other. Never pass a neutral or ground or shield or any other conductor other than the 3 wires listed above through the Ground Fault Current Transformer (T5).

    The ground fault interrupter TEST switch button (SW2) and Ground Continuity Switch Button (SW4), (push to test) should be used periodically to test the ground fault detection components. The TEST button on the Current Relay (CR1) need not be used.

    Ⓔ Relay (CR1) MUST have S3, S4 & S8 (located behind CR1 Front Plate) CLOSED
    TO PUT RELAY IN ACTIVE MODE. S3, S4, & S8 ARE ADJUSTED BY ENTRON AT FACTORY.
    TS17-1 MUST be connected to Gun Case (GND) at a point mechanically different from the High Current Protection Ground. See view below.

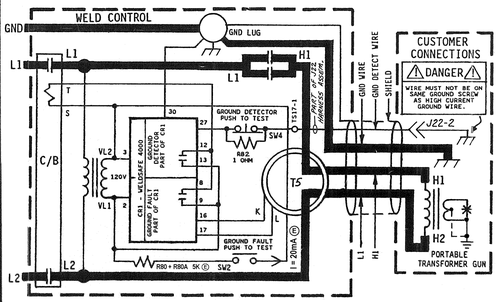

12. BEAT DURING SQUEEZE/NON BEAT DURING SQUEEZE - Control can be configured so that the weld sequence can be terminated before the end of the Squeeze Time by opening the initiation contacts.

    BEAT DURING SQUEEZE - If this is required, use Extended Function bE and set to 01. To remove beat during squeeze set Extended Function bE to 00. See manual for more information.

13. To convert the Control Panel from side mounted cabinet control to door mounted or door mounted cabinet control to side mounted.
    Remove Cover Plate and Control Panel Dial Plate Assembly. Position spiral wrap around all harness wiring to prevent interference of wiring with the closing of cabinet door. When mounting Control Panel on side of cabinet, use clamp to secure J3 harness wires.
    CAUTION: When changing the position of the Control Panel, be sure harness wires do NOT interfere with the closing of the cabinet door. Wires may pinch in between door & cabinet and cause damage to wiring.

14. For controls that are manufactured without a "S" connector. Substitute A/N 410319 for Terminal Strip Board (PCB2). Jumpers are used on A/N 410319 between TS1-PS1 & TS1-GND and also TS1-ES1 & TS1-GND as shown with dashed lines.
    NOTE: If wire connection are made in the field by customer to TS1-PS1 and/or TS1-ES1. Jumper(s) between TS1-PS1 & TS1-GND and/or TS1-ES1 & TS1-GND must be removed from the respective connection which is being used. SEE NOTE 3 ALSO.

15. This Wiring Diagram #421387-002 is for an EN1000-600/-1200/GF, "D/T" Cabinet with Type "S" Connector & Circuit Breaker. Prior to April, 1998, EN1000-600/-1200/GF, "D/T" Cabinet with Circuit Breaker control used Wiring Diagram #421232. Previous Wiring Diagram #421232 did NOT use the Type "S" Connector in the EN1000-600/-1200/GF, "D/T" Cabinet control.

CAUTION
SEE NOTE 2
For 460 VAC Operation - Use Jumpers #1
For 230 VAC Operation - Use Jumpers #2
For 575 VAC Operation - CONSULT FACTORY
For 115 VAC or 380 VAC Operation - CONSULT FACTORY.

CAUTION
SEE NOTE 2
For 460 VAC Operation - Use Jumper #1 ONLY.
For 230 VAC Operation - Use Jumper #2 ONLY.
For 575 VAC Operation - CONSULT FACTORY.
For 115 VAC or 380 VAC Operation - CONSULT FACTORY.

CAUTION
WATER HOSE BURST HAZARD
Cooling water must be flowing when power is on.
Water hose can burst and damage controls.
Do not remove or cover this sign. 4001958

PLUMBING DIAGRAM
SEE PARTS LIST FOR HOSE LENGTH
PLUMBING DIAGRAM "E" 600A & 1200A CONTACTORS
WFS OUT IN
ROUTING WITH WFS

NOTICE
FOR SERVICE ON THIS CONTROL
Contact Your Machine Dealer Or
ENTRON CONTROLS LLC.
DIRECTLY: (864) 416-0190
601 HIGH TECH COURT
GREER, SC 29650
FAX# (864) 416-0195
4001930

DANGER HAZARDOUS VOLTAGE
Electrical shock will cause severe injury or death.
PE Connect this terminal directly to earth ground.
Do not remove or cover this sign. 4001940

WARNING HAZARDOUS VOLTAGE FROM ONE OR MORE SOURCES
Turn off all voltage sources before entering cabinet.
Electrical shock or flash may cause severe injury or death.
Do not remove or cover this sign. 4001988

DANGER SHOCK HAZARD
TEST OPERATOR PROTECTION BEFORE USE.
ELECTRICAL SHOCK OR FLASH WILL CAUSE SEVERE INJURY OR DEATH.
Do not remove or cover this sign. 4001989

NOTICE
This weld control complies with the RWMA bulletin 5.015.68.04 for use with a hand-held transgun.
Proper installation and maintenance must be followed for hand-held transgun operation.
See instructions.
Do not remove or cover this sign. 4002144

DANGER HAZARDOUS VOLTAGE
DO NOT DEFEAT OR REMOVE PROTECTION CIRCUITRY.
Do Not Defeat or Remove Items Such as Ground Fault or Earth Leakage or Operate Without Shunt Trip Breaker.
Electrical shock will cause severe injury or death.
Do not remove or cover this sign. 4002039

DANGER HAZARDOUS VOLTAGE
Proper installation and maintenance must be followed for handheld transgun operation. Control must be installed with a primary power cable from control to transgun that is labeled to comply with RWMA Bulletin 5.015.68.04 for operator protection.
Electrical shock will cause severe injury or death.
Do not remove or cover this sign. 4002043

REV.	AUTH.	DESCRIPTION	DRAWN BY DATE	CHK'D BY DATE
E	DCS 10/7/11	IN PARTS LIST: CHG'D P/N 335034 TO P/N 335067.	DCS 10/7/11	
	ECN 2940	REVISED GF TEST TO 20mA; ADDED RESISTOR 80A.	DCS 11/12/08	
	ECN 2928	WELDSAFE 5000 (CR1) P/N 600695, SET SWITCH 8 TO CLOSED POSITION FOR A 20mSEC RESPONSE TIME.	DPD 2/29/08	
REV.	AUTH.	DESCRIPTION	DRAWN BY DATE	CHK'D BY DATE

EN1000-600D,T/GF EN1000-1200D,T/GF

PARTS LIST - CONTROL SECTION

421387-002 E

QTY.	DESIG.	PART NO.	DESCRIPTION
1		600528	Assem., Dial Plate, w/Sw. Assem., EN1000, Consisting of:
@		600528-001	Assem., Dial Plate, w/Sw. Assem. & Keylock, EN1000, Consisting of:
1	PCB1	600541	Assem., Switch, Sequence Control & Display Board
@	SW1	600531-001	Assem., Switch, Keylock, Momentary, SPST
1		540251	Illustrated Panel, Dial Plate, EN1000
1		515104	Panel, Display Window, Red Filter, EN1000
1		565003	Hole Plug, 3/4" Diam., Black
1	PWR.LT.	305001	Lamp, Neon, Red, 230V
1	WLD.LT.	305002	Lamp, Neon, Clear, 230V
1	J2-J2	322326	Assem., Harness, Control Bd. to Terminal Strip Board
1	J3	322334-007	Assem., Harness, Power, EN1000/GF, D/T Cab.

PARTS LIST - CONTACTOR SECTION

EN1000-1200D,T	EN1000-600D,T	QUANTITY	DESIG.	PART NO.	DESCRIPTION
Ⓔ 2	2		TS1,17	335067	Terminal Strip, 10 Pin, (Part of J3 Harness)
1	1		TS7	335044	Terminal Strip, 2 Pin
+	+		TS8	335017	Terminal Strip, 2 Pin, (For TLS/WFS)
1	1		T1	310001	Transformer, Control, (Part of J3 Harness)
1	1		T2	310002	Transformer, Sense, (Part of J3 Harness)
1	1		T3	311011	Transformer, Valve, 150VA, 24VAC
2	2		R70,71	225016	Resistor, Power, Surge, 500 Ohm, 100W
Ⓔ 2	2		R80,R80A	600645	Assem., Resistor, 10,000 Ohm, 1W, (For TS17)
1	1		R82	600646	Assem., Resistor, 1 Ohm, 1W, (For TS17)
1	1		F1	308010	Fuseholder, 1 Pole, Mini, 600V
Ⓐ 1	1		F1	307024	Fuse, Control, 1/4A, FNQ-R-1/4 or KLDR-1/4
3	3		F6,7,8(PCB2)	307022	Fuse, 1 Amp, Slow Blow, 2AG, (Part of 410319 & 410319-002)
1	1		(R70,71)	325024	Assem., Wire, Surge Resistor, 18 Ga., Black
2	2		(T3)	325149	Assem., Wire, Valve Transformer, 22 Ga., Black
	1			600610	Assem., Contactor, Thyristor, Water, 600A, 460/575V
	1			346004	Lug, Screw, 5/16 Bolt to 2/0 Wire, 600A Thyristor Contactor, H1
	1			346011	Lug, Screw, 1/4 Bolt to 2/0 Wire, 600A Thyristor Contactor, L1
1	1			341040	Standoff, Insulator, 600/1200A Thyristor Contactor, L1
1	1			325174	Assem., Wire, Contactor-L1 to Lug L1, 600/1200A Thy. Contactor
1				600598	Assem., Contactor, Thyristor, Water, 1200A, 460/575V
2				346002	Lug, Screw, 5/16 Bolt to 250 MCM Wire, 1200A Contactor, L1 & H1
1	1		J22	322196-021	Assem., Harness, TGA Gun, Type "S"
1	1		(TS2)	600649	Assem., Standoff, w/Insulator, TS2-H1, Consisting of:
				341045	Insulator, Insulation between H1 & H2 Lugs, TS2-H1
				341040-001	Standoff, Modified for Insulator, TS2-H1
4			(TS2)	346002	Lug,Screw,5/16 Bolt to 250 MCM Wire,1200A Cont.,TS2-H1 & TS2-H2
1	1		(TS2)	341040	Standoff, Insulator, TS2-H2
	4		(TS2)	346011	Lug, Screw, 1/4 Bolt to 2/0 Wire, 600A Cont., TS2-H1 & TS2-H2
1	1		T5	309514	Ground Fault Current Transformer
Ⓐ 1	1		CR1	600695	Relay, Residual Current & Ground Detection, supplied w/Manual
2	2		SW2,4	300016	Switch, Push Button, SPDT, (For Test)
1	1		TLS	300020	Switch, Temperature Limit, (N.C.)
1	1			346004	Lug, Screw, Chassis GND, 2/0 Wire
1	1		PCB2	410319-002	Assem., PCB, Terminal Strip Board, EN1000(TGA)
X	X		PCB2	410319	Assem., PCB, Terminal Strip Board, EN1000, w/o "S" Connector
1	1		(PCB2)	510236	Plate, Mounting, Terminal Strip Board
	1			530021	Plate, Mounting, 600/1200A Thyristor Contactor
	1			324371	Wire, 2/0, 600A Thyristor Contactor, TS2-H2 to C/B-L2, 30" Long
	1			324372	Wire, 2/0, 600A Thyristor Contactor, TS2-H1 to Cont-H1, 20" Long
	1			324365	Wire, 2/0, 600A Thyristor Contactor, C/B-L1 to Cont-L1, 16" Long
1				324373	Wire,250 MCM,1200A Thyristor Contactor,TS2-H2 to C/B-L2, 25" Lg.
1				324374	Wire,250 MCM,1200A Thyristor Contactor,TS2-H1 to Cont-H1, 18" Lg.
1				324368	Wire,250 MCM,1200A Thyristor Contactor,C/B-L1 to Cont-L1, 14" Lg.
36"	36"			900045	Hose, 3/8" I.D.
4	4			566010	Hose Clamp, 3/8" Hose
2	2			600179	Assem., Water Fitting, 3/8" Hose
+	+		WFS	600297	Assem., Water Flow Switch, 3/8" Hose
1	1			550014	Vault Closing Door Mechanism, "D/T" Cabinet
1	1			510247-002	Cabinet, Control, Style "D/T", w/CB, Modified for GF
1	1			510248	Door, Cabinet, Control, Style "D/T"
1	1		SW2	302024	Switch, Oiltight, Push Button, Red, N/O Contact, 22mm
Ⓒ 1	1		SW4	302025	Switch, Oiltight, Push Button, Red, N/C Contact, 22mm
1	1		C/B		Circuit Breaker, Pole, Amp, V, w/110 VAC Shunt Trip
1	1			700105	Manual, EN1000
1	1			421183	Logic Diagram, EN1000 Control
Ⓑ 1	1			421387-002	Wiring Diagram, EN1000(TGA)-600/-1200/GF, "D/T" Cabinet

@ Optional Keylock when specified by customer. See Note 8. Pack Key in Poly bag 900148 & attach to Door w/Yellow Tape 900118.

X Optional. When customer specifies that control be shipped without an "S" Connector, substitute PCB2 A/N 410319 for A/N 410319-002. See Note 14.

\+ Optional Water Flow Switch Assembly & TS8. An additional Thirty-Six inches (36") of hose, P/N 900045 and two (2) hose clamps, P/N 566010 are to be supplied. See Note 9.

MANUFACTURING INSTRUCTIONS:
See Drawing #600592 for Mechanical Layout/Assem. of EN1000/GF, "D/T" Cabinet.
See Drawing #440366 for Inner pack & Use carton #650016 for "D/T" Cabinet Packing Instructions.
See Drawing #440437 for Circuit Breaker to L1 Contactor Cable connections.
See Drawing #600526 for Layout/Assem. of Front Panel.
Relay (CR1) MUST have S3 & S4 (located behind CR1 Front Plate) closed to put Relay in active mode. Ship with Manufacturer Relay manual.

REV	AUTH	DESCRIPTION	DRAWN BY DATE	CHK'D BY DATE
D	ECN 2925	IN TITLE BLOCK, CHG'D DESC OF CTRL TO INCLUDE "TGA". UPDATED LABELS TO CURRENT REV.	DPD 2/7/08	
C	ECN 2892	CHG'D SWITCH 2 & 4 WAS P/N 300016, NOW SW2 IS P/N 302024 AND SW 4 IS P/N 302025.	DPD 2/15/07	
B	ECN 2785	ADDED VIEW OF PCB2 A/N 410319 TO DRWG. CHGD. TITLE WAS "...W/ TYPE "S" CONN., & 24 VAC VALVE..." TO "...W/ OR W/O TYPE "S" CONN., W/ 24VAC VALVE..."	RJL 9/16/05	
A	ECN 2631	IN GROUP 6 (DIAL KIT) CHANGED P/N FROM 307018 TO 307024.	DEC 7-15-02	DEC 7-15-02
	ECN 2713	IN DRWG. ADDED REF. NOTE "PRIOR TO 10-1-00..." THE GROUP 6 (DIAL KIT) CHANGED W/ REFERENCE TO P/N 307024. IN DRWG. UPDATED NOTE 11 "GND FAULT INTERRUPTER..."		
—	—	ORIGINAL RELEASE		

ENTRON CONTROLS INC

SCALE	DATE	DRAWN BY	CHK'D BY	APPROVED BY
AS	4-16-99	DEC	DEC 4-16-99	

TOLERANCE UNLESS SPECIFIED
ANGLES: ± 1/2°
DECIMALS: ± .010
FRACTIONS: ± 1/64

REVISED		
REV LTR		APPROVED BY
E		
DATE		DCS
10/7/11		

WIRING DIAGRAM, EN1000(TGA)-600/1200/GF, "D/T" CABINET WITH OR WITHOUT "S" CONNECTOR, WITH 24 VAC VALVE TRANSFORMER, & CIRCUIT BREAKER

NEXT ASSM/USED ON | DRAWING NUMBER 421387-002 | REV E

22×34