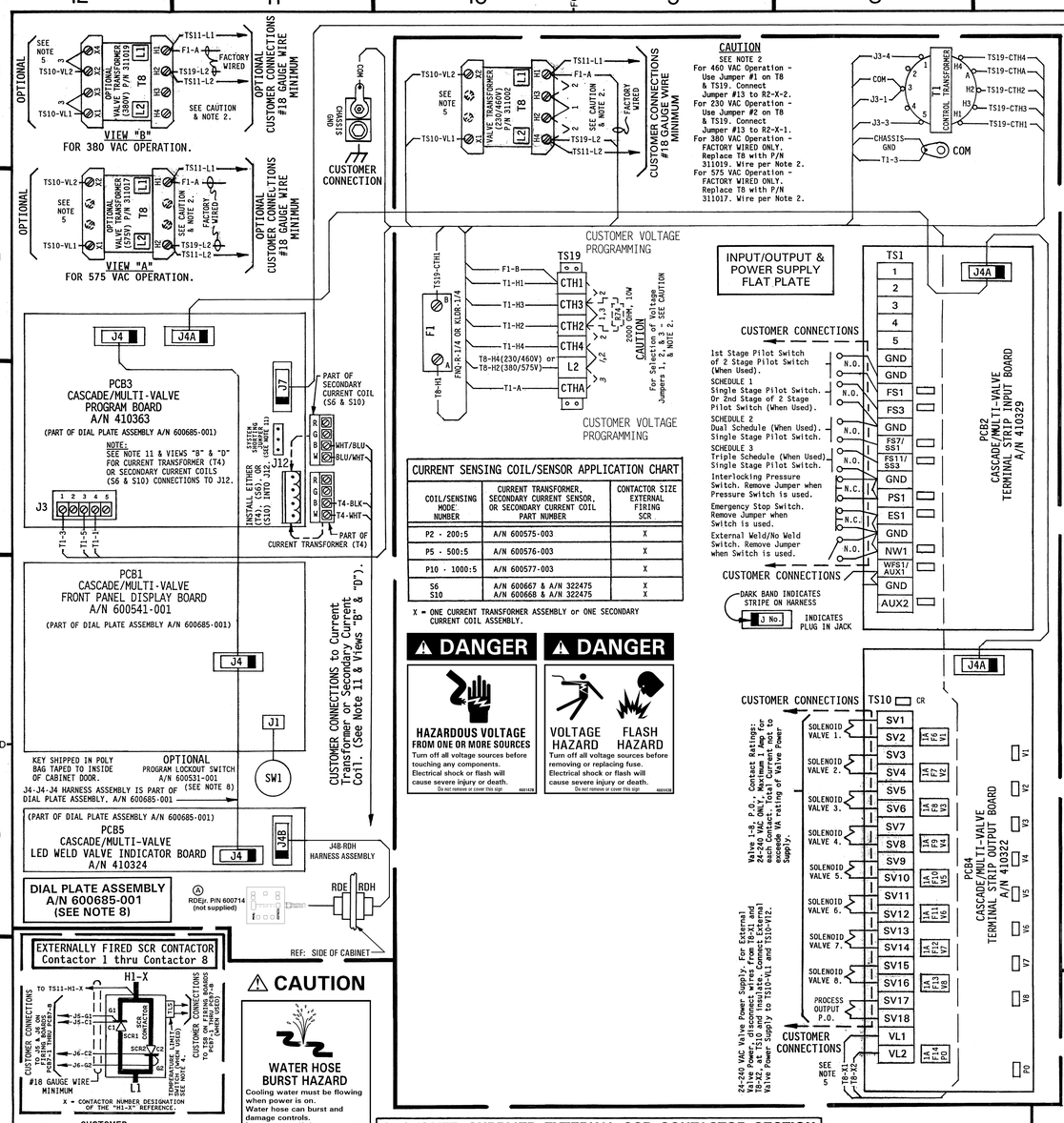

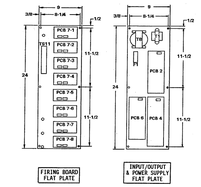

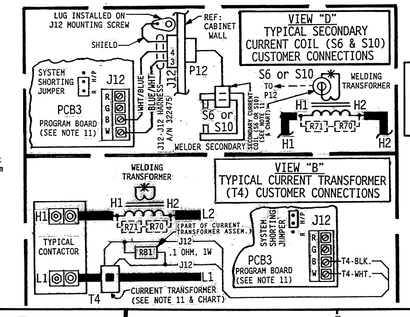

CAUTION - READ MANUAL & ALL NOTES BEFORE INSTALLING OR OPERATING CONTROL. SEE NOTE 1.
NO CIRCUIT CALIBRATION OR ADJUSTMENT EVER REQUIRED.

NOTES:

1. It is recommended that control wiring (i.e.: initiation, pressure switch, etc.) be physically separated from the high voltage wiring (115 volts or higher).
2. For 460 VAC Operation - Use Jumper #1 on T8 & TS19. Connect Jumper #13 (Yellow) to Resistor(s) R2-X-2 (from T2-H4) on Power Supply's. As shipped unless otherwise specified.
   For 230 VAC Operation - Use Jumper #2 on T8 & TS19. Connect Jumper #13 (Yellow) to Resistor(s) R2-X-1 (from T2-H4) on Power Supply's.
   For 380 VAC Operation - FACTORY WIRED ONLY. SEE VIEW "B". Replace T8 with P/N 311019. Wire per view "B". Use Jumper #3 on T8 & TS19. Add Jumper #3 between L2 to CTHA on Terminal Strip TS19. Use Jumper #3 between CTH2 & CTH3 on Terminal Strip TS19. Connect Jumper #13 (Yellow) to Resistor(s) R2-X-2 (from T2-H4) on Power Supply's.
   For 575 VAC Operation - FACTORY WIRED ONLY. SEE VIEW "A". Replace T8 with P/N 311017. Wire per view "A". Use Resistor R74 (2000 Ohm, 10 Watt) in place of Jumper #1 between CTH2 & CTH3 on TS19. Use Jumper #1 between CTH4 & L2 on TS19. Connect Jumper #13 (Yellow) to Resistor(s) R2-X-2 (from T2-H4) on Power Supply's.
   X = Contactor number designation of the "X-" reference for R2-X-1 and R2-X-2.
   CAUTION: All Power Supply's MUST have Jumper #13 wired for the same voltage.
3. For Single Stage Pilot Operation - Connect Pilot Switch to TS1-FS3 & TS1-GND. No Jumpers required across TS1-FS1 & TS1-GND.
   For Two Stage Pilot Operation - Connect 1st Stage Pilot Switch to TS1-FS1 & TS1-GND. Connect 2nd Stage Pilot Switch to TS1-FS3 & TS1-GND.
   For DUAL COUNT/DUAL CURRENT (Dual Weld/Dual Heat) or TRIPLE COUNT/TRIPLE CURRENT (Triple Weld/Triple Heat) or External Schedule Selection - SEE MANUAL.
4. EN1001-FP(SCR), CASCADE/MULTI-VALVE CONTROL:
   When used, connect Normally Closed (N.C.) Temperature Limit Switch (TLS) across TS8 on supplied PCB7 Firing Board(s). Contactor 1 TLS connects to PCB7-1, Contactor 2 TLS connects to PCB7-2, etc. Remove Jumper between TS8 terminals. Customer supplied interconnection wiring for TLS should be physically separated from all other interconnection wiring.
   CAUTION: Do NOT overtighten TS8.
5. When external valve power is supplied to the control. Remove and insulate leads TS10-VL1 & TS10-VL2 on the Terminal Strip Output Board (PCB4). (from T8-X1 & T8-X2). Connect external AC power supply (24-240 VAC) to TS10-VL1 & TS10-VL2.
6. This drawing is for Cascade/Multi-Valve Controls for any of 1 thru 8 Contactors and up to 8 Valves. Please note in the contactor section that electrical connections connect from the 1st contactor to the 2nd contactor then continue in succession (DAISY CHAIN) from one to another in numerical order until the last contactor is electrically connected in the Cascade arrangement. In the Parts List, parts with multiple quantities listed, correspond to the various number of cascade contactor arrangements.
7. The Termination Plug A/N 322330 will ALWAYS be located in the "J-OUT" socket on the Firing Board of the last numbered Contactor in the Cascade arrangement.
8. When Optional Program Lockout is specified by customer. Add Switch P/N 600531-001 and Escutcheon P/N 460128 & remove Hole Plug P/N 565003.
9. EN1001-FP(SCR), CASCADE/MULTI-VALVE CONTROL:
   Disconnect all connections from previously existing firing circuits to L1, L2, H1, H2, & also SCR contactor Gate leads & SCR contactor Cathode leads. All previously existing Surge Resistors or Rectifiers MUST be replaced prior to installation of this control.
   CAUTION: Do NOT overtighten TS8, J5, or J6.
10. All customer Connection Wiring to be made with #18 Ga. Wire Minimum.
11. CURRENT TRANSFORMER (T4) CONNECTIONS:
    Wire per view "B". Current Transformer Coil (T4) MUST be installed ONLY on L1.
    Wires from Current Transformer (T4) to J12 should be kept as short as possible.
    SECONDARY CURRENT COILS (S6 & S10) CONNECTIONS:
    Wire per view "D". Secondary Current Coils (S6) & (S10) may be used in place of Current Transformer (T4). Add J12-J12 Harness 322475.
    NOTE:
    Program Board A/N 410363 MUST have the System Shorting Jumper installed into the correct two (2) pins for usage with either a Current Transformer (T4) or Secondary Current Coils (S6 & S10). See applicable View "B" or "D" for correct Jumper installation.

MANUFACTURING INSTRUCTIONS:
See Drawing #600622 for Firing Board Flat Plate Assembly.
See Drawing #600623 for Input/Output & Power Supply Flat Plate Assembly.
See Drawing #440468 for Packing Instructions.
See Drawing #440469 for Label Locations.
See Drawing #440457 for Current Transformer Assembly.
See Drawing #440478 for Secondary Current Coil Assembly.

NOTICE

FOR SERVICE ON THIS CONTROL
Contact Your Machine Dealer Or
ENTRON CONTROLS LLC.
DIRECTLY: (864) 416-0190
601 HIGH TECH COURT
GREER, SC 29650
FAX# (864) 416-0195

CAUTION
SEE NOTE 2.
Control Shipped is wired for 460 VAC Operation unless otherwise specified.

PARTS LIST - CONTROL SECTION

421438-018 A

QTY.	DESIG.	PART NO.	DESCRIPTION
1		600685-001	Assem., Dial Plate, EN1001 Cascade, Consisting of:
1	PCB1	600541-001	Assem., Switch, Front Panel Display Board
1		540298	Illustrated Panel, Dial Plate, EN1001 Cascade/Multi-Valve
2		515096	Display Window, Panel, Red Filter, Cont. & Valve, EN1001 Casc.
1		515104	Display Window, Panel, Red Filter, LED, EN1001 Cascade
1	PCB3	410363	Assem., PCB, Program Board, EN1001 Cascade/Multi-Valve
1	PCB5	410324	Assem., PCB, Cont. Weld & Valve Indicator Board, EN1001 Casc.
1	J4-J4-J4	322342	Assem., Harness, Seq. Display Bd/Program Bd/LED Indicator Bd
@	SW1	600531-001	Assem., Switch, Keylock, Momentary, SPST
1	J4B-RDH	322369-007	Assem., Harness, LED Indicator Bd/9 Pin "D" Connector, EN1001-FP(SCR)
1	J3	322418	Assem., Harness, Power,EN1001-FP(SCR)/RDH, Cascade/Multi-Valve
1	J4A-J4A-J4A	322420	Assem., Harness, Program Bd./Output Bd./Input Bd., EN1001-FP(SCR)
1	J7-IN	322421	Assem., Harness, Program Bd. to Firing Board, EN1001-FP(SCR)/RDH

PARTS LIST - CONTACTOR SECTION (EN1001-FP(SCR))

QTY.	DESIG.	PART NO.	DESCRIPTION
Ⓐ 1	TS11	335067	Terminal Strip, 10 Pin, 20A, (Part of J3 Harness)
1	TS19	335024	Terminal Strip, 6 Pin, 20A, (Part of J3 Harness)
1	T1	310001	Transformer, Control, (Part of J3 Harness)
1	T8	311002	Transformer, Valve, 150VA, 230/460V
⊠	T8	311017	Transformer, Valve, 150VA, 575V
X	T8	311019	Transformer, Valve, 150VA, 380/408/415V
X	T8	311022	Transformer, Valve, 250VA
X	T8	311021	Transformer, Valve, 500VA
2	(T8)	325149	Assem., Wire, Valve Transformer, 22 Ga., Black
1	F1	308010	Fuseholder, 1 Pole, Mini, 600V, HPC-L(BBS)
1	F1	307024	Fuse, Control, 1/4A, FNQ-R-1/4 or KLDR-1/4
9	F6-14	307022	Fuse, 1 Amp, Slow Blow, 2AG, (Part of 410322)
1-8		600547-005	Assem., Power Supply, Selectable 230/380/460/575V, Consisting of:
1-8	T2	600548-003	Transformer, Sense, (Part of 600547-005)
2-16	R1,2	225016	Resistor, Power, Surge, 500 Ohm, 100W, (Part of 600547-005)
1-8	(R1,2)	325024	Assem., Wire, Surge Resistor, 18 Ga., Black,(Part of 600547-005)
1-8	PCB7-1 thru -8	410323-001	Assem., PCB, Firing Board, Cascade, (Mounted on Power Supply)
0-7	J1N-JOUT	322348-006	Assem., Harness, Firing Bd., Input to Output
1	JOUT	322330	Assem., Termination Plug, Cascade Firing Bd. (SEE NOTE 7)
⊠	R74	600048	Assem., Resistor, Power, 2000 Ohm, 10W, (For 575V)
1		346004	Lug, Screw, Chassis GND, 5/16" Bolt to 2/0 Wire
1	PCB2	410329	Assem., PCB, Terminal Strip Input Bd., Cascade
1	PCB4	410322	Assem., PCB, Terminal Strip Output Bd., Cascade
2		510236	Plate Mounting, Terminal Strip Input & Output Boards
*	T4	SEE CHART	Assem., Transformer, Current, 200:5, P2
*	T4	SEE CHART	Assem., Transformer, Current, 500:5, P5
*	T4	SEE CHART	Assem., Transformer, Current, 1000:5, P10
*	S6	600667	Assem., Secondary Current, 6" Coil Rogowski
*	S10	600668	Assem., Secondary Current, 10" Coil Rogowski
*	J12-J12	322475	Assem., Harness, Secondary Current, Rogowski Coil
1		510268	Flat Plate, 9" x 23-5/8", Firing Board, EN1001-FP(SCR)
1		510269	Flat Plate, 9" x 23-5/8", Input/Output & Power Supply
1		700202	Manual, RDH Options
Ⓐ 1		700194	Manual, EN1001 Cascade
1		421451	Logic Diagram, EN1001 Cascade
1		421438-018	Wiring Diagram, EN1001-FP(SCR)/RDH, Cascade/Multi-Valve

@ Optional Keylock when specified by customer. See Note 8. Pack key in poly bag P/N 900148 & attach to door w/yellow tape P/N 900118.
X Optional.
⊠ Substitution or addition of part when 575V control is specified.
* See Current Sensing Coil/Sensor Application Chart for Part Number of either T4, S6, or S10.

Ship one (1) Poly Bag P/N 900148 with control & include the following items in bag:

4 Each #6-32 x 1/4" PHSMS, Phil., Black	P/N 557004
4 Each #6-32 x 1/4" A/F Hex Nut	P/N 557018
1 Each Label, "DANGER, HAZARDOUS VOLTAGE.....".*	P/N 460142/RWMA156103C
1 Each Label, "DANGER, VOLTAGE AND FLASH HAZARD.....".*	P/N 460143/RWMA156103A
1 Each Label, "VOLATGE HAZARDOUS.....EARTH GND.....".*	P/N 460144/RWMA156103D
1 Each Label, "CAUTION, WATER HOSE BURST HAZARD.....".*	P/N 460145/RWMA156103E
1 Each Label, "WARNING, HAZARDOUS VOLTAGE.....".*	P/N 460146/RWMA156103B
1 Each Label, "CAUTION, DO NOT PINCH WIRES.....".*	P/N 460170

REV	AUTH	DESCRIPTION	DRWN BY DATE	CHK BY DATE
A	DCS 7/13/11	CHG'D RDE TO RDEjr.	DCS 7/13/11	
—	—	ORIGINAL RELEASE		

ENTRON CONTROLS INC

SCALE	DATE	DRAWN BY	CHK'D BY	APPROVED BY
	03/31/08	DPDH		

TOLERANCE UNLESS SPECIFIED
ANGLES: ± 1/2°
DECIMALS: ± .010
FRACTIONS: ± 1/64

REVISED		
REV LTR	DATE	APPROVED BY
A	7/13/11	DCS

WIRING DIAGRAM, EN1001-FP(SCR)/RDH, 9" X 23-5/8" FLAT PLATE, CASCADE/MULTI-VALVE CONTROL.
1-8 EXTERNAL SCR CONTACTORS/8 VALVE OUTPUT CIRCUIT
WIRED FOR SELECTABLE 230/380/460/575 VAC OPERATION

NEXT ASSM/USED ON	DRAWING NUMBER	REV
	421438-018	A